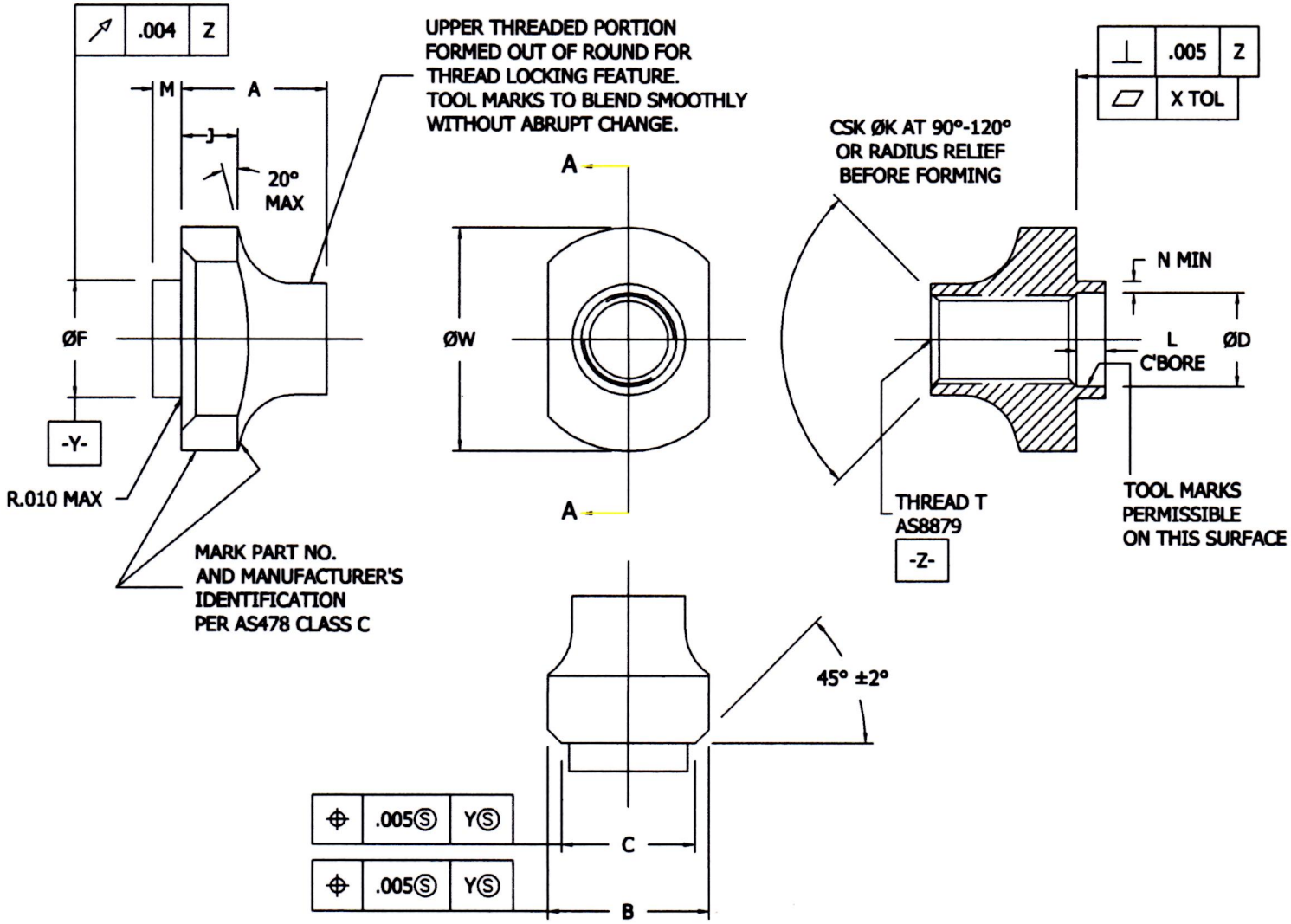

TABLE 1A - DIMENSIONS A-W

PART NUMBER	THREAD T (AS8879)	A +.005 -.010	ØB ±.005	ØC ±.004	ØD +.003 -.002	ØF ±.002	ØW ±.010
NA2407-02	.1640-36 UNJF-3B	.233	.368	.259	.171	.211	.442
NA2407-03	.1900-32 UNJF-3B	.257	.394	.285	.197	.237	.468
NA2407-04	.2500-28 UNJF-3B	.406	.450	.371	.266	.331	.625
NA2407-05	.3125-24 UNJF-3B	.468	.480	.401	.328	.394	.625
NA2407-06	.3750-24 UNJF-3B	.500	.600	.475	.401	.468	.750

TABLE 1B - DIMENSIONS K-J

PART NUMBER	ØK +.020 -.000	L ±.010	M ±.003	N MIN	X TOL	J ±.015	APPROX MASS LB/100
NA2407-02	.164	.063	.063	.015	.0014	.070	.32
NA2407-03	.190	.066	.066	.015	.0014	.105	.50
NA2407-04	.250	.080	.080	.027	.0014	.158	1.38
NA2407-05	.312	.108	.108	.027	.0016	.190	1.61
NA2407-06	.375	.119	.119	.027	.0016	.212	2.74